With Malcolm McBride
Airworthiness Engineer

REPORTABLE INCIDENTS 2017, MORE HAND-STARTING AND MOGAS ISSUES, EV97 CANOPY & J430 UNDERCARRIAGE BOLT

The latest LAA Engineering topics and investigations

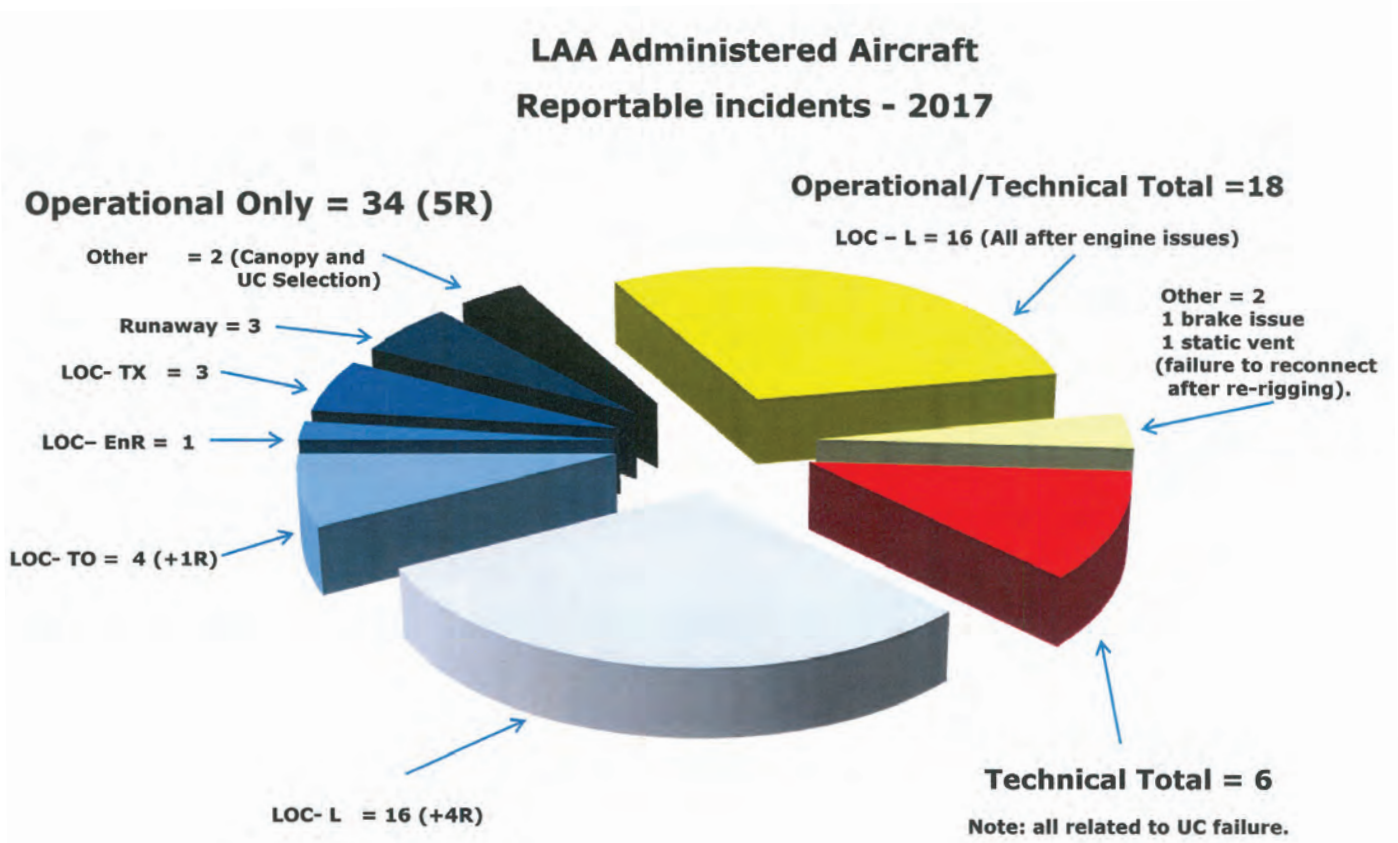

Welcome to Safety Spot, I hope that you and those you care for remain well enough to enjoy the many good things which surround us all. I am, it has to be said, just about able to maintain a smile through the gloom of winter, it's absolutely pouring down with rain outside and the normally busy airfield here at our Turweston HQ has settled into a few days of hibernation. Instead of placing my head into a light box – I'm not officially a victim of Seasonally Affected Disorder, but SAD is a brilliant acronym. I'll get on with writing *Safety Spot*, that'll cheer me up…

REPORTABLE INCIDENTS

I expect that you've already fathomed-out the almost obligatory 'pie' chart I created, using the numbers culled from the airworthiness database. It confirms that the vast majority of incidents which reached the level of being a 'reportable' incident have been labelled as Operational – in 2017 it was something like eighty per cent. You'll note that we've looked at the numbers for 2017 in a slightly different way. Instead of having just two categories (Operational and Technical), we've added a third which, for lack of another name, we've called Operational/Technical (Opp/Tech).

> "Instead of having just two categories (Operational and Technical), we've added a third, which we've called Operational/Technical (Opp/Tech)"

Most of these Opp/Tech incidents, as you can see from the chart, relate to a loss of control during landing (LOC-L) after an engine issue of some sort. I say 'issue' because the incidents don't only involve complete engine failures, though most of them do – sometimes, a partial or even a perceived problem has ended in a poor landing, often in a farm field.

Of the 38 'LOC-L' (landing) incidents in 2017 (out of a total of 62 incidents), four featured gyroplanes, sixteen were straightforward pilot error events, sixteen involved a problem with the engine and two, counted as Opp/Tech, had other technically-related causes.

In the past, if a pilot damaged an aircraft during a forced landing after an in-flight emergency, such as an engine failure, it'd

simply be counted as a LOC-L incident. That was because of the mantra, 'The pilot of a single engined aircraft should always fly in such a way that, in the event of an engine failure, he or she must able to safely land the aircraft.' This is a good general rule which implies no damage to the airframe in the event of a forced landing.

However, taking into account the variables – the unseen rut or fence post, livestock, etc – that's often an impossible task. The pilot of a single-engined aircraft has to balance the risk of a powerplant failure against the terrain they're flying over – it's an operational decision, with the possible overall risk of an engine failure, which is a technical issue.

As part of our annual incident-accounting exercise, it should also be noted that, although an aircraft may have been damaged during a forced landing, it doesn't necessarily mean the damage was severe. Or indeed, taking that into account, that the damage implies poor pilotage – it's very easy to damage an undercarriage when landing on rough terrain, even when a pilot exhibits great skill getting the aircraft down in one piece in a challenging circumstance.

Almost every incident leading to a report will include both operational (pilotage, decision making, past training, currency, age-related issues, etc) and technical aspects (design, service history, age, etc).

Six out of our 62 incidents (around ten per cent) have been labelled as having a purely technical origin and all of these were the result of a mechanical failure in the undercarriage. The causes included issues with the rigging of retractable undercarriages, wear, unspotted previous damage (after a heavy landing), and one potential design issue (torque link over-load failure on the Titan Mustang).

LAA-administered gyroplanes featured in five 'reportable' 2017 incidents. One hit terrain while the pilot's attention was distracted, while the others, as stated, involved landing incidents. It's worth looking at the gyroplane numbers in a little more detail…

There's a Mark Twain adage, which I expect you've heard: "There's lies, damned lies, and statistics." This is an illusion, as statistical analysis forms one of the building blocks in much of what we do, though, especially when dealing with relatively small data sets (where one event can make a big difference to a quoted percentage), it's important to take the numbers as a guide rather than a directive when it comes to changing policy or directing safety resource.

An issue which can make or break any statistical analysis is bias. Naturally, we try to avoid this as far as possible. One way we do this is by relying on an external body to make the decision as to what's counted – and the UK AAIB does this for us by providing the list of reported accidents and incidents. All we do is classify the incidents and accidents, add up the numbers and present them as a list.

That said, part of our role is to look into these numbers to see if we can tease out common features between incidents and then, using a variety of tools, try to offer ways to improve overall safety. Because an incident may have one glaring cause doesn't mean that we should ignore the less obvious components.

Don't forget, when looking at the LAA's incident list, each accident featured a huge number of variables and, because most would accept that the LAA has a very good safety record, it's a relatively tiny data-set.

(Left) **Another brief lapse in concentration, another hand-starting incident. Fortunately, the pilot of this excellent example of a 1943 Piper L4H didn't forget to chock the wheels. He did, however, have a narrow escape when the aircraft pitched forward after the engine 'fired-up' with the throttle incorrectly set. This engine will now need a full shock-load inspection and a new propeller – an expensive error.** *(Photo: Stuart Gray)*

> "It's very easy to damage an undercarriage when landing on rough terrain, even when a pilot exhibits great skill getting the aircraft down in one piece"

Looking through the numbers from 2017, I can say with certainty that our total fleet size is 6,907 aircraft, which doesn't include 'projects' (some 1,527) because they're not really 'flying'. Some 4,137 aircraft have expired *Permits to Fly* – should we include those (or some of them) while trying to figure out an incident rate?

To make things simple, we stated that our fleet size contains only the aircraft with a current Certificate of Validity which is 2,770 aircraft. We appreciate that this, in reality, lower fleet number will make our overall incident stats look worse, but then we aren't trying to garnish an argument, we're engineers trying to seek guidance from the numbers about ways to make things safer for everybody. Our numbers show that for fixed-wing aircraft (totalling 2,598) the annual incident rate is approximately two per cent.

Looking, as promised, at the gyro fleet numbers, well, we've taken on the factory-built types over the last few years, and three of these featured in landing incidents. Rotorsport types, including the MTO series and, of course the beautiful Calidus and Cavalon two-seaters, represent the largest contingent (105 aircraft), with Magni M16 and M24 types being the other factory-built machines so far accepted (38 aircraft)… that's a total of 143 FB gyros. We've looked after the kit-built and plans-built gyros for many years, our fleet includes Mongomery-Bensen, Cricket, Everett, RAF and VPM types, some 201 aircraft in total.

Currently though, and emphasising the earlier question about 'what to count', only 29 (around fourteen per cent) of these 'heritage' aircraft have current *Certificates of Validity*. That's a total of 143 + 29 = 172 aircraft, so although there may have only been five gyro incidents through 2017, this drives an incident rate of around eight per cent, some four times higher than for fixed-wings.

Last year there were four fatal accidents involving LAA-administered aircraft – two Europas, an Auster and one Kolb Twinstar – during which, sadly, five people lost their lives. Our job (that's you and me) is to work hard to keep our accident/incident rate down to as low a value as possible. One way of doing this is establishing exactly what's gone wrong after an incident and making changes so that, in future, similar incidents can be avoided. In an organisation like the LAA this can only be achieved with everybody's participation, so keep the reports coming in.

ANOTHER HAND-STARTING MISHAP

Thanks for all your fuel-related and hand-starting feedback, driven by the January edition of *Safety Spot* – it's, all good stuff.

Take a look at the article on page 56 of this issue, by Jim Crawford, where he explains his quick-release device, which is designed to stop an aircraft running away during a hand-start, should something go wrong.

Said device perhaps wouldn't have helped our latest hand-start victim – the first, and let's hope last of the year! Enough has been said on this subject so I won't go on about it further here, except to say that our annual accident statistics for 2017 have now been collated and it shows that we lost three aircraft to hand-starting incidents through the year. To be fair, they were only the ones that reached the level of being a 'reportable' incident.

Very fortunately, last year, nobody was injured in a hand-start incident, though this 'first of 2018' sounds to have been a close-shave for the pilot, almost literally!

MOGAS AND JABIRU WET-WINGS

Thanks especially to a number of you who let me know that I'd missed out the two-seater Jabiru J160 in the list of the manufacturer's ›

aircraft which also have wing tanks. You'll remember, I hope, that we've written an *Airworthiness Information Leaflet* (*AIL*) prohibiting the use of mogas in these wet-wing types. If you haven't got a clue what I'm talking about, apologies, I've had my telling-off from our Chief Inspector, Ken Craigie, who complained that he's let the Inspectors know we've issued a number of *AIL*s prohibiting the use of mogas in all wet-wing Jabiru aircraft and said they can read about it in *Safety Spot*. Trouble is, and I'm not sure why, it never reached these pages!

We've addressed this issue now, first by issuing an *AIL* for the J160 and updating the *Airworthiness Alert* (available from the LAA's Engineering web page), and second by briefly talking about it in this edition of *Safety Spot*.

Affected Jabiru owners should also note that in the updated *Alert*, we've also corrected an *AIL* numbering error, so please make sure that your logbooks reflect the corrected *AIL* reference number if you've already checked your aircraft. Ken Craigie, our Chief Inspector, has alerted the Inspectors about this directly, so they should be up to speed if you need advice.

We have, of course, discussed some of the issues surrounding the use of mogas many times over the past months, and talked about the issue where rippling was seen on a Jabiru J400 wing skin back in the June 2017 edition of *LA*. Here I'll just remind all owners that there's an investigation and approval procedure to be followed before mogas is permitted to be used in suitable LAA aircraft and, if you want to read the recently published *AIL*s concerning the wet-wing Jabirus, go to the 'Alerts' page in the Engineering section of the LAA website, *www.laa.uk.com*.

Before I leave the mogas story, I must thank LAA Inspector Dave Almey for his good memory. We've written to the owners of the two Jabiru UL450 'Calipso' microlight hybrids, which are operating with the sandwich-skinned wet wings of the UL-D model, rather than having the usual, foam-filled UL-450 wings and a single separate tank in the rear of the cabin.

It's a lesson, perhaps, one which reminds us that, although two aircraft operating in the LAA fleet may have the same name and look similar, they may possess significant differences. The variations between apparently identical LAA aircraft were highlighted in the many discussions about fuel systems last year.

LAA AIRWORTHINESS LEAFLETS

The recent issues with Jabiru 'wet wings' has, as we've already discussed, led to the LAA prohibiting the use of mogas in Jabirus with fuel tanks mounted in the wings. The *AIL*s which the LAA uses to pass information to owners of aircraft have three levels of urgency built in. They're listed on the bottom of the leaflet itself as:

- Classification A – Considered Mandatory by the LAA
- Classification B – Recommended by the LAA
- Classification C – Material published for information and/or guidance

Naturally, time pressures being what they are, most of the *AIL*s that LAA Engineering produces are considered very important, and therefore carry Classification A, in other words 'must do'. The *AIL* prohibiting the use of mogas in wet-winged Jabs was just such a case.

Of course, we don't like imposing restrictions on things but when we see a problem in an aircraft (or operation) in our fleet then, as part of the aforementioned safety response, we have to act in an appropriate way.

LAA AIRWORTHINESS ALERT

LAA/AWA/18/01
3rd January 2018

Jabiru J400, Jabiru J430 Aircraft & Jabiru J160

Mogas Prohibition

A number of 'wet wing' Jabiru aircraft types, all of which feature similar forms of construction and materials, have suffered some external softening and rippling of their wing skins in the vicinity of the installed composite fuel tanks. The manufacturers have advised that this rippling, when confined to small areas of the wing skin, does not affect the structural integrity of the wings of these aircraft. However, if allowed to progress through large areas of the aircraft skin or to the underlying structure, the integrity of the wings structure might be adversely affected.

In all known cases where wing skins have been affected the aircraft have been stored for a long period of time with Mogas fuel left in the wing tanks. It is known that Mogas is less stable over time than certified Aviation fuel and it is felt likely that the negative effect on the composite wing's structure is due to some of the many reactive breakdown products produced by this fuel, most likely held in the fuel vapour.

On 1st November 2017 Jabiru Aircraft Pty Ltd issued Service Letter JSL 007-7, this Service Letter advises that Mogas must not be used in certified examples of Jabiru aircraft. This Service Letter can be downloaded HERE

Because of the recent issues with Jabiru wet wing aircraft in the UK, seemingly connected to fuel vapour generated by Mogas, and the advice from the manufacturer, the LAA has withdrawn the former permission to use Mogas in all wet wing Jabiru aircraft. The AIL mandating this change for J400 aircraft can be downloaded HERE. The AIL mandating this change for J430 aircraft can be downloaded HERE. The AIL mandating this change for J160 aircraft can be downloaded HERE.

Page 1 of 1

(Left & below) **LAA Engineering has issued a number of *Airworthiness Information Leaflets* (*AIL*s) prohibiting the use of mogas in all wet-wing Jabiru aircraft following problems. These include the rippling and softening of the wing skins on some aircraft which have been using mogas. This prohibition affects the four-seat J400-series aircraft, the Factory-Built Microlight version (UL-D), the J160 two-seaters and a few UL 430/450 two-seaters. Naturally, we've sent all the owners of these aircraft a copy of the relevant *AIL* directly, but access to them is available via links in the online version – look for 'Alerts' in the Engineering section of our website, *www.laa.uk.com*.** *(Photo: LAA Library)*

EVECTOR EV97 CANOPY CATCH

Quite often, a manufacturer will come up against an event in their worldwide fleet of aircraft and issue a factory *Service Bulletin* as a response to the event. LAA Engineering evaluates these carefully, to see whether we feel that the requirements held within the *Bulletin* are proportionate or appropriate to the risk that the apparent problem might pose.

A good example of this is the recent *Bulletin* issued by Evektor, introducing a second canopy catch (see photos opposite, top). In this case, LAA Engineering doesn't feel that the risk of a canopy coming undone poses a great threat on this particular aircraft type. That because early testing showed that when the canopy was opened in flight it only did so to about six inches and then stabilised. Flight control wasn't affected and the aircraft had sufficient power reserves to overcome the increased drag.

JABIRU J430 UNDERCARRIAGE FAILURE

Another reason for a factory *Bulletin* might be issued is that in-service experience has shown that a component may have a limited service life. We evaluate these factory instructions against the operational norm in the LAA, which is that each component is assessed as being suitable during a thorough inspection. LAA Engineering terms this as being operated On-Condition. We're particularly wary of imposing restrictions when the factory *Bulletin* requires a component change based upon calendar life.

In 2005, Jabiru Aircraft issued a *Service Bulletin* (the company calls these *JSB*s) requiring that all the undercarriage attachment bolts on its J400 (four-seat) range of aircraft be upsized, from 5/16" to 3/8". Later, in 2009, Jabiru issued another *JSB*, which introduced a life of 500 hours into these bolts. Although it didn't say so directly, the *JSB* implied that all of its aircraft must be fitted with the bigger bolts and were included in this life limit.

At that time, we hadn't had any failures in our fleet so we didn't mandate this using our *AIL* system. Then, through 2013, we saw two undercarriage failures linked to these bolts, so we issued an *AIL* effectively mandating the *JSB*. The *AIL* required the fitment of the larger bolt, regular inspections for looseness and replacement at 500 hours. ›

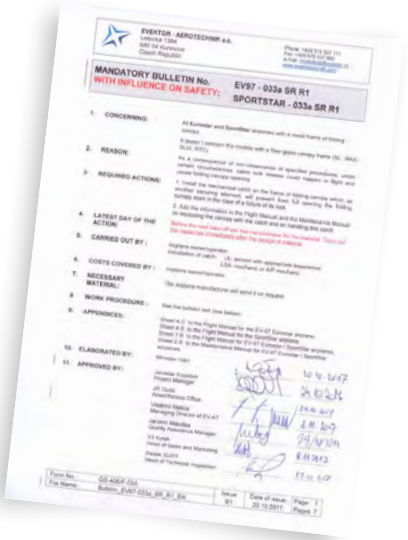

EVEKTOR - AEROTECHNIK a.s.
Letecká 1384
686 04 Kunovice
Czech Republic

MANDATORY BULLETIN No. EV97 - 033a SR R1
WITH INFLUENCE ON SAFETY: SPORTSTAR - 033a SR R1

1. CONCERNING:
2. REASON:
3. REQUIRED ACTIONS:
4. LATEST DAY OF THE ACTION:
5. CARRIED OUT BY:
6. COSTS COVERED BY:
7. NECESSARY MATERIAL:
8. WORK PROCEDURE:
9. APPENDICES:
10. ELABORATED BY:
11. APPROVED BY:

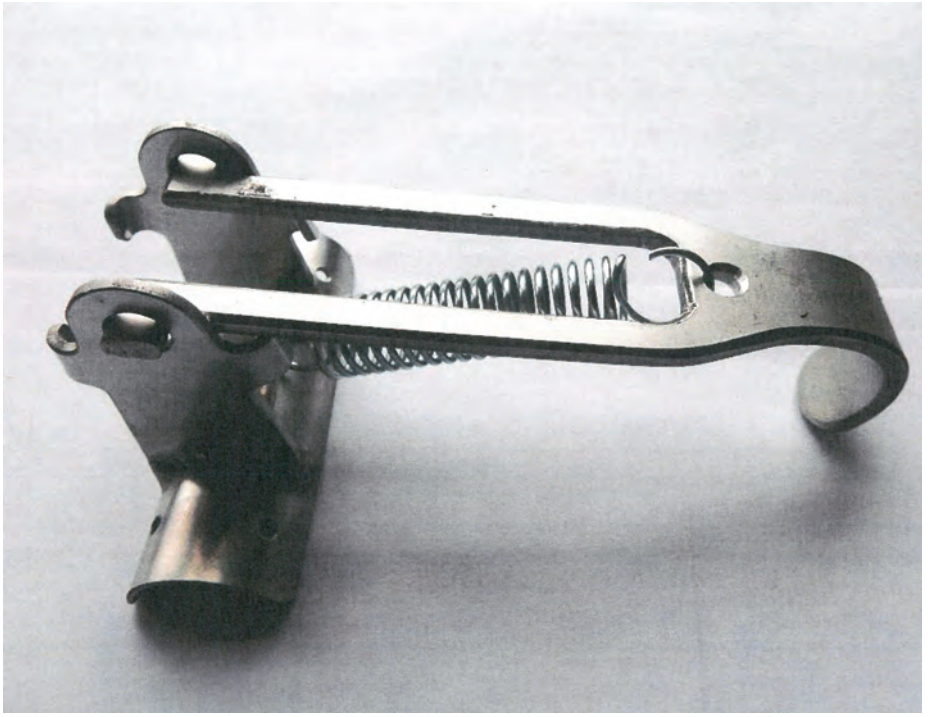

(Above & right) **Sometimes a safety device doesn't really solve the root problem, though there may be some safety benefit. A recent *Service Bulletin* issued by Evektor affecting the UK EV97 EuroStar fleet, seems to be a good case in point. This secondary canopy catch would stop it opening more than a few inches if a pilot forgets to secure the canopy before flight, but if he or she forgot the first catch, why would they remember the safety catch?** *(Photo: Dave Simpson)*

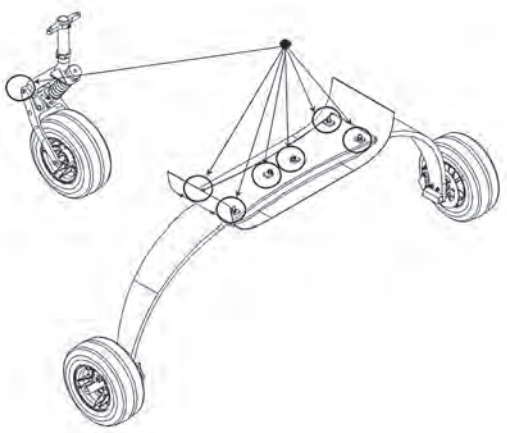

(Right & below) **Regular readers of *Safety Spot* will remember that we featured this picture in the December 2012 edition. This was followed by the issuance of a number of type-specific *Airworthiness Information Leaflets* (*AIL*s), mandating a factory *Service Bulletin* limiting the life of the attachment bolts to 500 hours. The *AIL*s also required a detailed inspection of the undercarriage. We're returning to this issue because a Jabiru 430 aircraft in our fleet has recently suffered an undercarriage failure, and the owner wasn't aware of the importance of maintaining a careful eye on this undercarriage attachment. The *AIL*s offer advice about the best method for checking the tightness of the undercarriage bolts, something that hadn't been undertaken on the subject aircraft for some time. The pictures show the general arrangement of the Jabiru undercarriage system – the left and right legs are separate cantilever springs. You can see that each main undercarriage leg is secured by three bolts, the outer two being 3/8'' (AN6) bolts fitted through a clamp (see close-up below) which holds the leg to the fuselage structure. The inner bolt on each leg is rubber-mounted which, along with the flexible nature of the composite leg itself, affords some flex. The main undercarriage leg is canted forward, which creates a loading asymmetry in the clamp itself and, as you can see from the picture of a clamp, if an attachment bolt becomes loose, fretting will occur.** *(Photos: Jabiru Aircraft Pty/AAIB)*

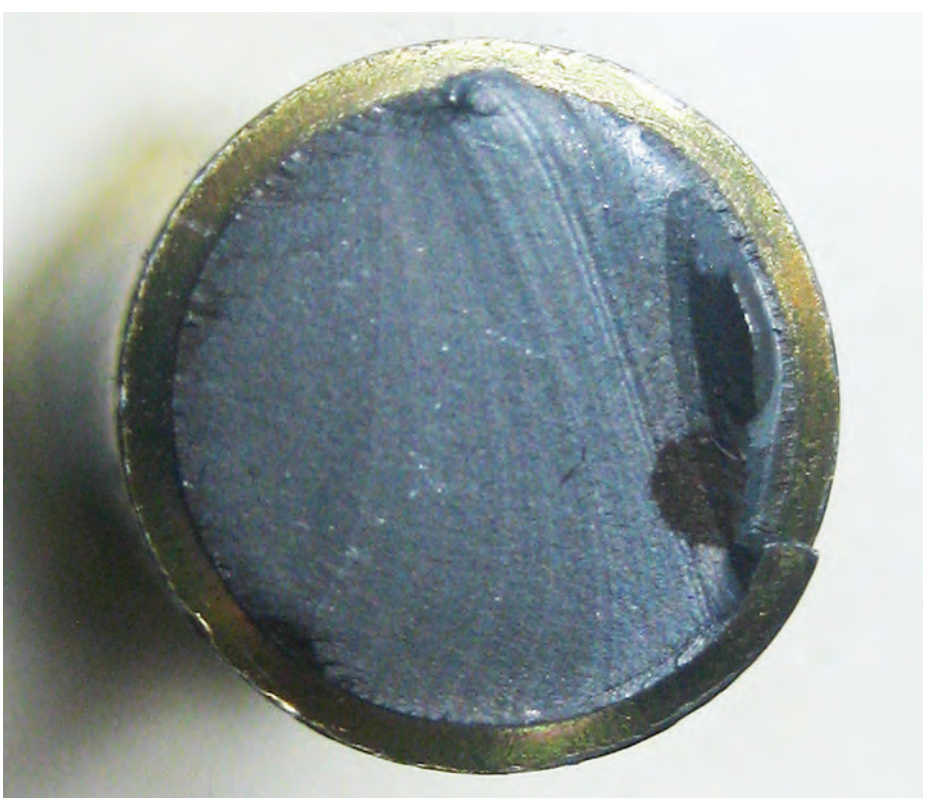

(Top & above) **This pair of photos show two mechanisms of failure of the Jabiru main undercarriage attachment system. In the first example, from an earlier failure, the nut has actually failed and pulled off the bolt, and the residue of the material of the nut's threads is clearly visible. The second picture shows the fracture face from the most recent failure. Note the multiple overload (beach) lines, clearly demonstrating a failure through fatigue. And also note the small area of corrosion (at about four o'clock) suggesting an initial break, perhaps during a heavy landing, then failure due to fatigue over time.** *(Photos: AAIB/Malcolm McBride)*

Here's LAA'er Stephen King's account of a recent bolt failure on his J430:

"My Jabiru J430 is lovingly looked after and currently has 430 hours TT and first flew in 2008. I'm the second owner and have owned the Jab for over four years now. As for me, I've coming up for 1,400 hours and about 200 on my 430.

"I had flown the J430 once that day already, taking my wife on the very short trip to North Weald, as she likes a wonder round the market. The flight there and back was completely uneventful.

"After getting back to Damyns Hall Aerodrome, I offered to take my brother for a short local flight – he's also a Jabiru owner. With power checks complete we lined-up on R21 and applied power.

Our runway is pretty smooth for grass and doesn't have any nasty bumps or undulations. I generally try to get the nosewheel light ASAP, and I was accelerating nicely down the runway with the nosewheel just hovering above the ground.

"At approximately 45-50kt we heard a oud bang, which I thought was a puncture. I immediately throttled back, but didn't brake, allowing the aircraft to coast to a stop.

"At that point I still thought that it was a puncture, but the right wing did appear to be quite low. I shut-down and we both exited the aircraft. It was clear, once we were out, that the centre undercarriage bolt had failed.

"The leg had dropped at the centre-bolt, popping off the undercarriage cover panel. I'd say that the leg at the centre-bolt point had dropped about 100mm and it was the fuselage, just outboard of the main leg clamp, which had stopped the leg rotating up any further.

"Luckily, with plenty of friends at Damyns Hall, we were able to find a spare AN6 bolt and quite quickly lift the wing and replace it. I taxied back to my spot and was amazed at how little damage there was. In fact, the only damage appeared to be the cover panel that had popped off and the paint on it was crazed.

"A few days later, we took the leg off to inspect further and did find that one of the main clamp bolts had very slightly bent. But with the leg out of the way the undercarriage tunnel and mounting points were all inspected and no further damage was found. We put the leg back on with some more temporary bolts.

"Since this incident I have ordered two new leg clamps, new centre-bolt rubbers and a complete new bolt set, which I've now fitted."

Stephen's report just goes to show that it's important to take notice of other people's experience. He wasn't aware of the advice on the subject in the LAA's *Type Acceptance Data Sheet* (which are known as *TADS*, for short), or the requirement to regularly inspect this undercarriage bolt.

Although the undercarriage bolt hadn't quite reached its 500-hour life, the fact that it'd become loose in the clamp meant it was far more prone to the effects of fatigue. Also, evidence from the bolt suggests an early-overload partial failure, which is possible owing to a heavy landing or, perhaps, running over a rut at high cockpit weight.

In any event, bravo to Stephen for his quick thinking in not using the brakes!

Okay, that's it for this edition of *Safety Spot*, please keep your tales coming through. As I always say, safety is *everybody's* business. Fair Winds. ■

(Top & above) **Another winter, another aircraft damaged by a hangar collapse. This time, the primary culprit was an unexpected snow shower, whereas normally the problem is wind. Fortunately, and rather by luck, the damage to the aircraft inside wasn't catastrophic. The lightweight structure had buckled under the snow load, which this type wasn't designed to resist – note that the damage to the aircraft was limited to the perspex canopy, which has now been replaced. However, as you can see, the empennage had a narrow escape.** *(Photos: Dave Stephens)*

LAA ENGINEERING CHARGES – PLEASE NOTE, NEW FEES HAVE APPLIED SINCE 1 APRIL 2015

LAA Project Registration	
Kit Built Aircraft	£300
Plans Built Aircraft	£50
Issue of a Permit to Test Fly	
Non-LAA approved design only	£40
Initial Permit issue	
Up to 450kg	£450
451-999kg	£550
1,000kg and above	£650
Permit renewal (can now be paid online via LAA Shop)	
Up to 450kg	**£155**
451-999kg	**£200**
1.000kg and above	**£230**
Modification application	
Prototype modification	minimum £60
Repeat modification	minimum £30

Transfer	
(from CofA to Permit or CAA Permit to LAA Permit)	
Up to 450kg	£150
451-999kg	£250
1,000kg and above	£350
Four-seat aircraft	
Manufacturer's/agent's type acceptance fee	£2,000
Project registration royalty	£50
Category change	
Group A to microlight	£135
Microlight to Group A	£135
Change of G-Registration fee	
Issue of Permit Documents following G-Reg change	£45
Replacement Documents	
Lost, stolen etc (fee is per document)	£20
Latest SPARS - No.16 February 2015	